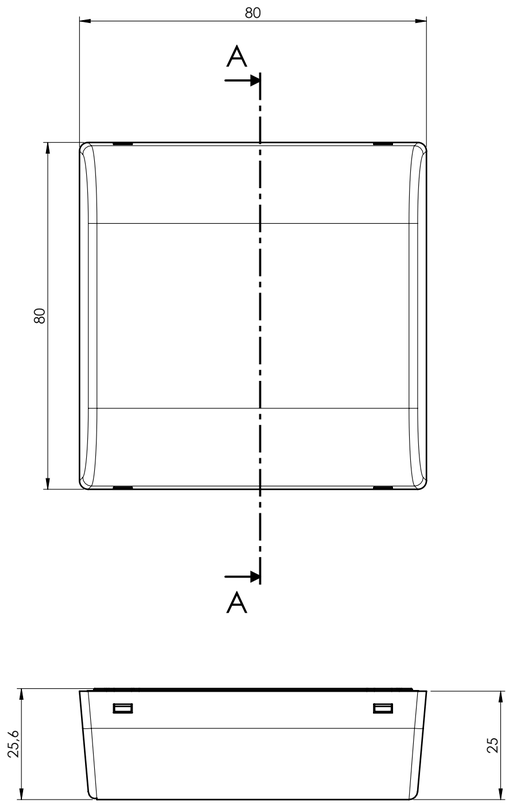

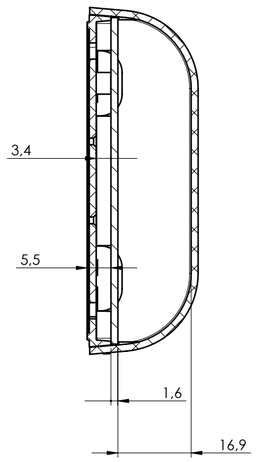

SECTION A-A

BODY

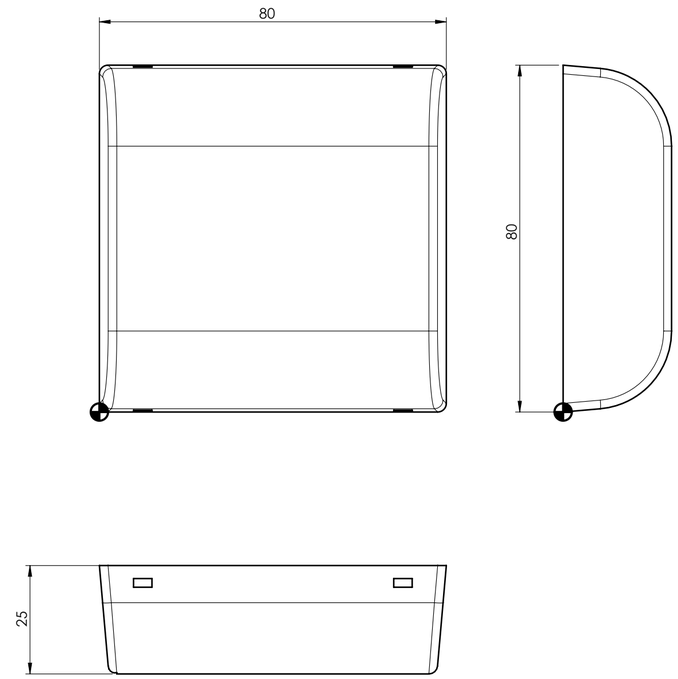

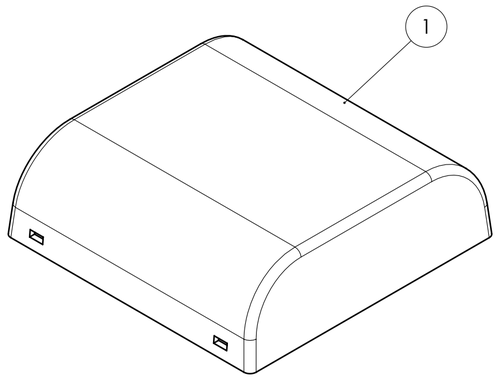

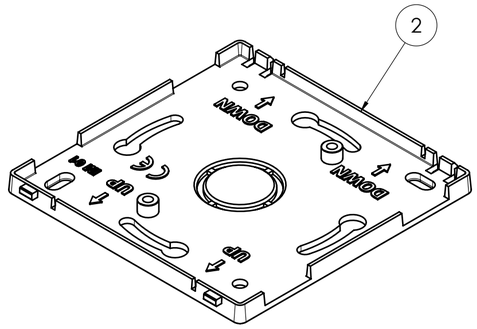

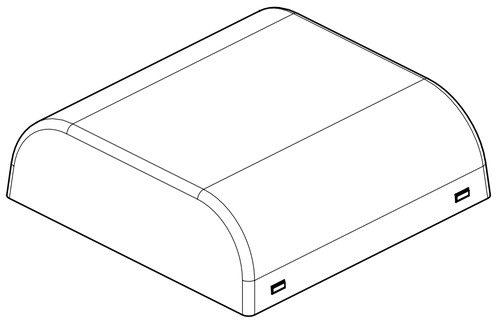

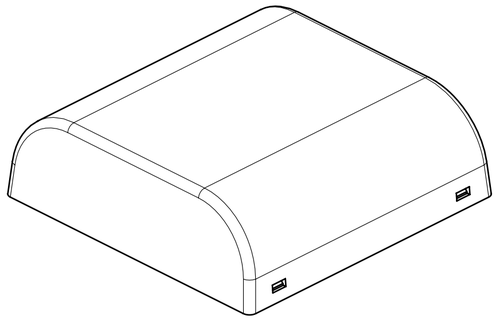

BASE

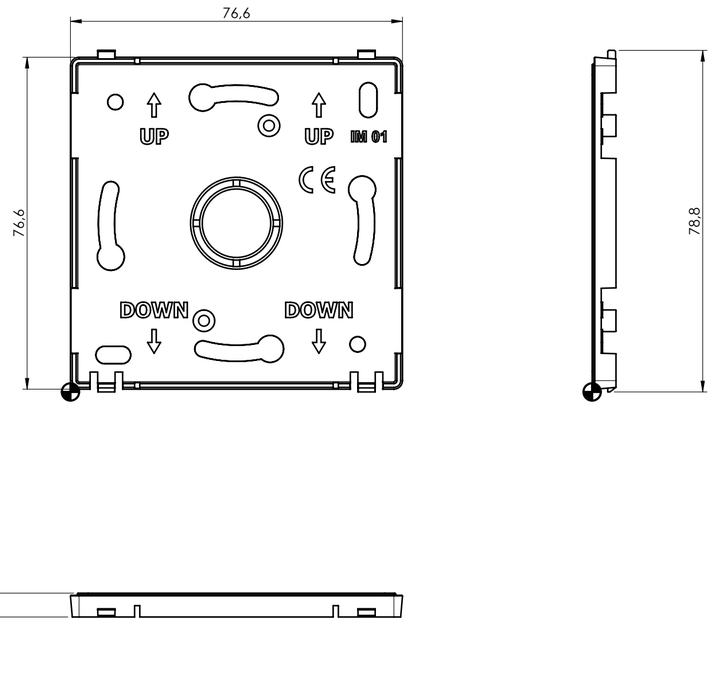

General information:
- Workpiece zero point for mechanical processing
- Minimum recommended radius for machining = R1.0 mm
- Mounting rail like EN 60715: TH 35-7.5 or TH 35-15
- Recommended PCB outline on www.italtronic.com

RIF.	Q.TY	DRAWING	DESCRIPTION
1	1	2_030_00017	COVER THERMO 80 CLOSED
2	1	2_030_00018	BASE THERMO 80 WITH TURRETS

General Tolerance UNI EN 22768/1 Media (m)					Sheet:
from 0.5 to 3	from 3 to 6	from 6 to 30	from 30 to 120	from 120 to 400	1
± 0.1	± 0.1	± 0.2	± 0.3	± 0.5	

Scale:	IM:	Drawed:	Checked:	Date:	Material:	Process:
1:1	--	D.S.	R.N.	24/04/2025		

Dimension in mm	The present drawing cannot be reproduced or communicated to 3d parties, even partially, without the authorization of ITALTRONIC SR. Italtronic reserves to protect its own rights according to the law.	Replaces the:	Derived from:	Weight:	Cod. Mold:
		--	--	gr	--

italtronic
enclosures for electronics
italtronic.com

Description:
KIT CONTENITORE THERMO CHIUSO 80 BASE CON TORRETTE
KIT ENCLOSURE THERMO CLOSED 80 BASE WITH TURRETS

Drawing nr.: **3_030_00015**

Rev.: 01

A2

PCB

COMPONENTS SIDE

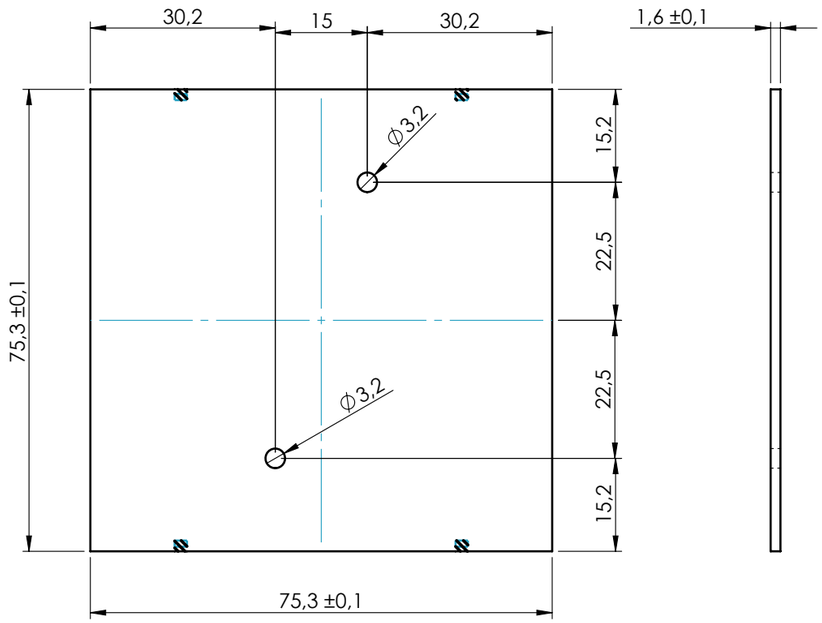

WELDING SIDE

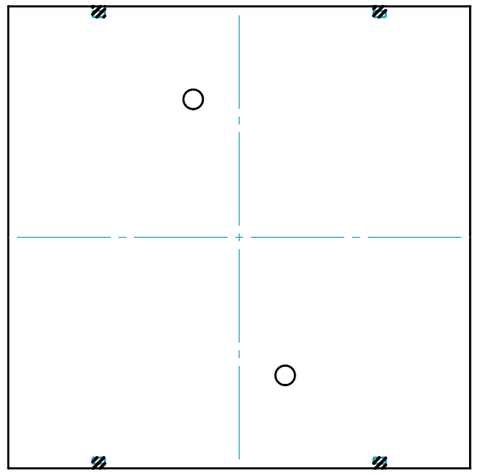

TEMPLATE FOR WALL MOUNTING

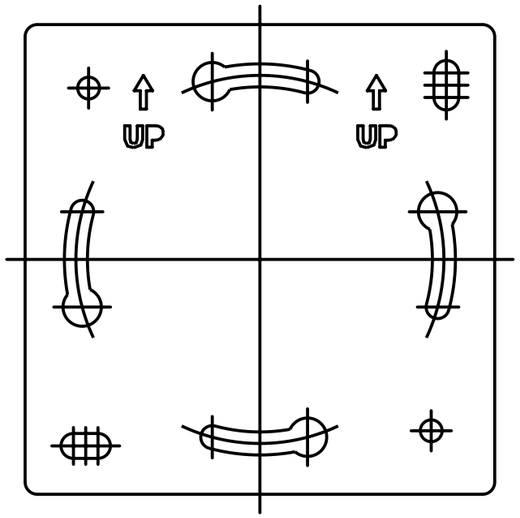

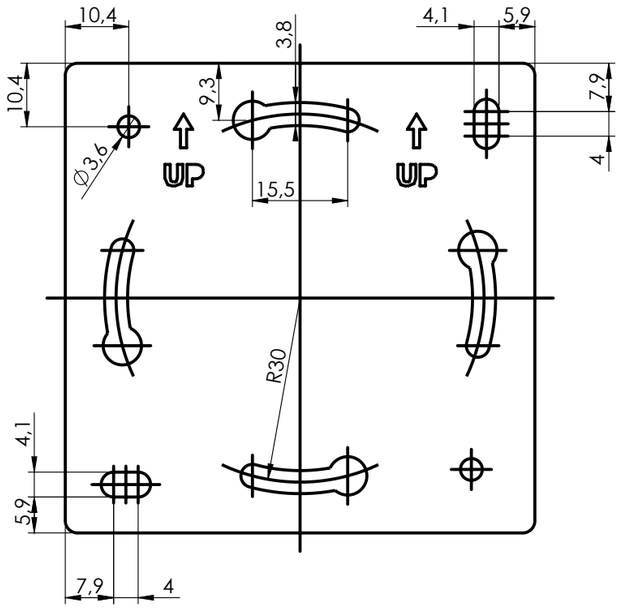

NO COMPONENTS AREA

General Tolerance UNI EN 22768/1 Media (m)					Sheet:
from 0.5 to 3	from 3 to 6	from 6 to 30	from 30 to 120	from 120 to 400	PCB
± 0.1	± 0.1	± 0.2	± 0.3	± 0.5	
Scale: 1:1	IM: --	Drawed: D.S.	Checked: R.N.	Date: 24/04/2025	Material: / Process:
Dimension in mm	The present drawing cannot be reproduced or comunicated to 3d parties, even partially, without the authorization of ITALTRONIC Srl. Italtronic reserves to protect its own rights according to the law.	Replaces the: --	Derived from: --	Weight: gr	Cod. Mold: --

italtronic
enclosures for electronics
italtronic.com

Description:
KIT CONTENITORE THERMO CHIUSO 80 BASE CON TORRETTE
KIT ENCLOSURE THERMO CLOSED 80 BASE WITH TURRETS

Drawing nr.: **3_030_00015**
Rev.: 01
A3