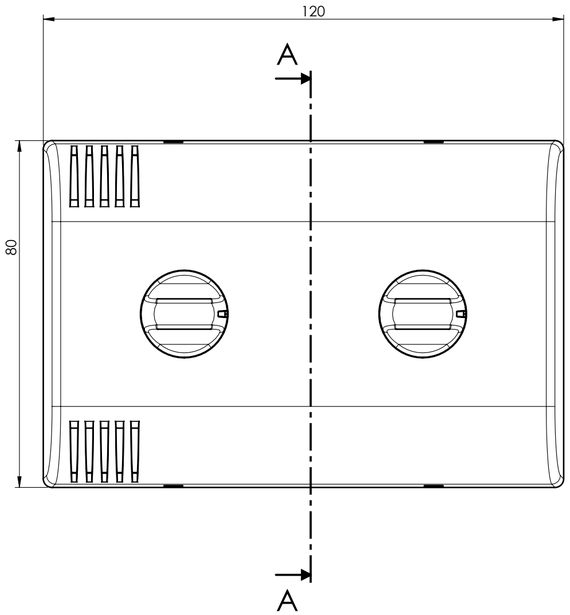

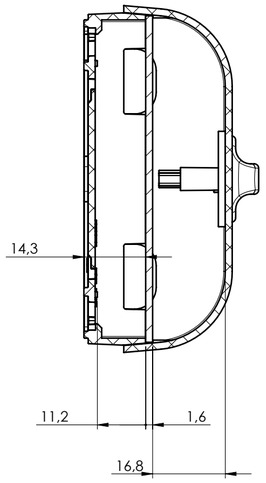

SECTION A-A

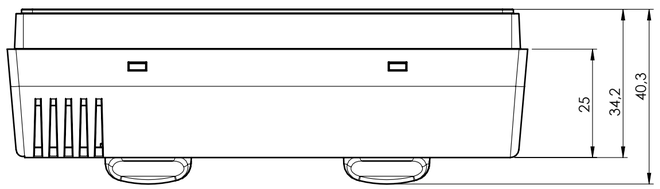

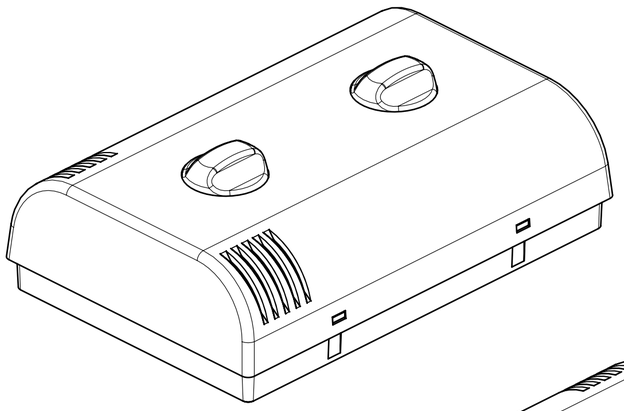

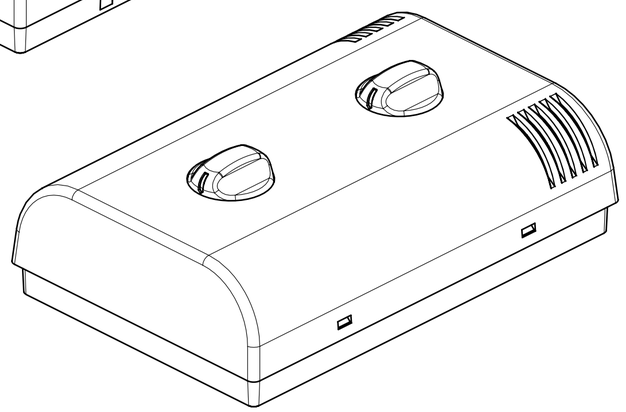

BODY

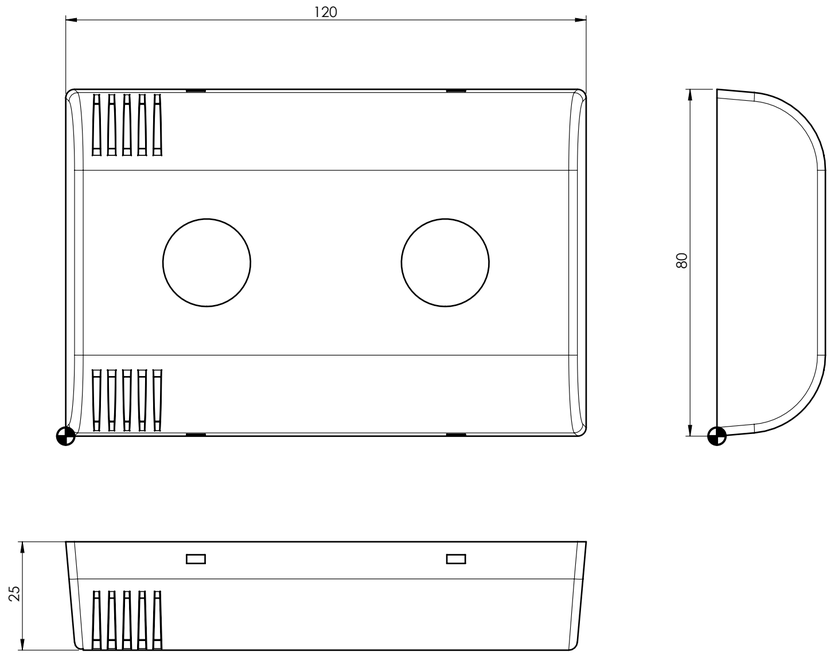

BASE

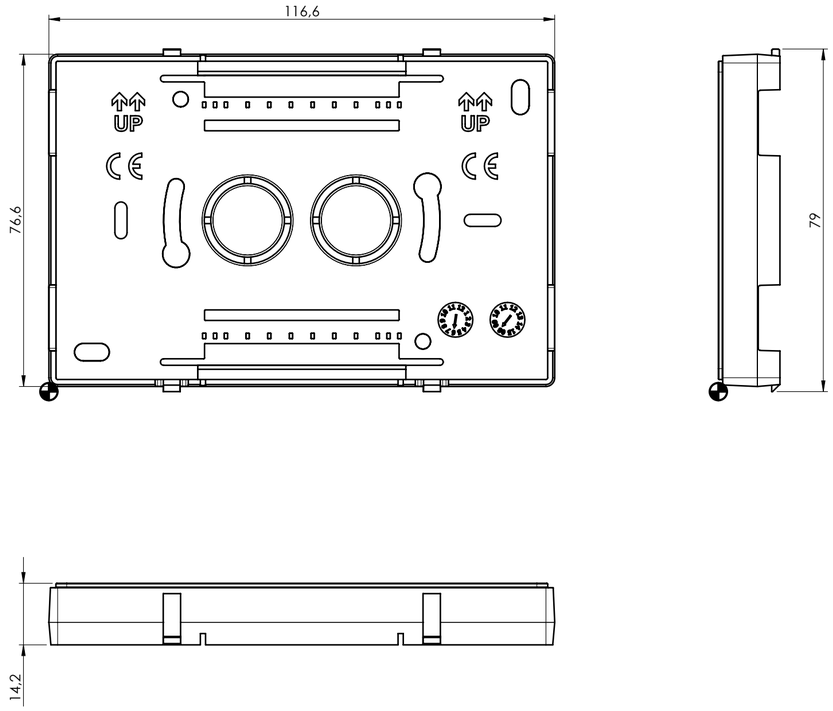

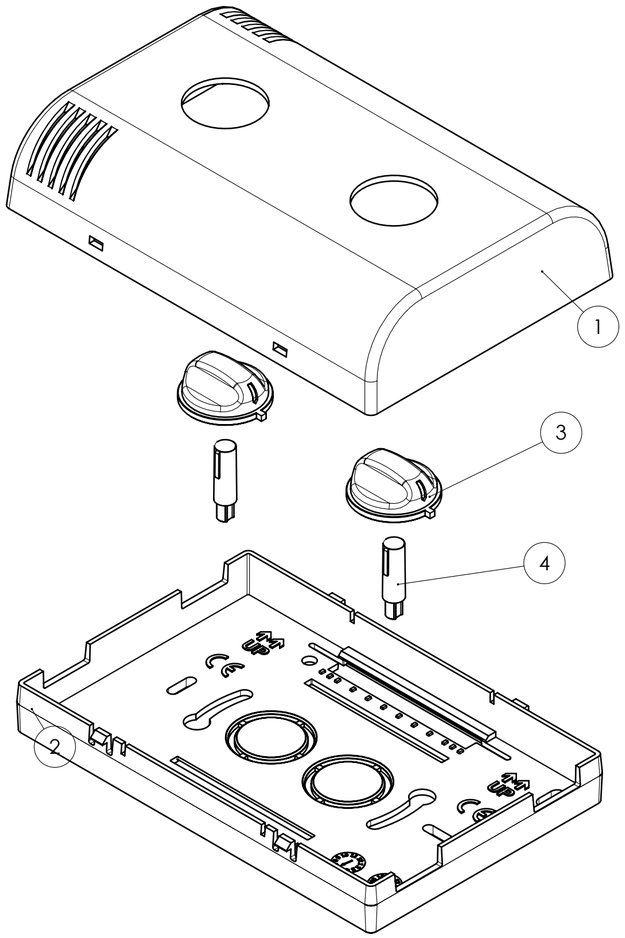

General information:
- Workpiece zero point for mechanical processing
- Minimum recommended radius for machining = R1.0 mm
- Mounting rail like EN 60715: TH 35-7.5 or TH 35-15
- Recommended PCB outline on www.italtronic.com

RIF.	Q.TY	DRAWING	DESCRIPTION
1	1	2_030_00041	COVER THERMO 120 WITH VENTS WITH 2X KNOB D20
2	1	2_030_00023	BASE 120 CSF18
3	2	2_010_00065	ITOUCH D20 HIGH PROFILE KNOB WITH EMBOSSED LEVER
4	2	2_030_00008	PIN THERMO 20.2 mm

General Tolerance UNI EN 22768/1 Media (m)						Sheet:
from 0.5 to 3	from 3 to 6	from 6 to 30	from 30 to 120	from 120 to 400		1
± 0.1	± 0.1	± 0.2	± 0.3	± 0.5		
Scale: 1:1	IM: --	Drawed: D.S.	Checked: R.N.	Date: 29/04/2025	Material:	Process:
Dimension in mm		The present drawing cannot be reproduced or comunicated to 3d parties, even partially, without the authorization of ITALTRONIC Srl. Italtronic reserves its protect its own rights according to the law.	Replaces the: T-06565-00	Derived from: --	Weight: gr	Cod. Mold: --

italtronic
enclosures for electronics
italtronic.com

Description:
KIT CONTENITORE THERMO VENTILATO 120 CSF CON MANOPOLE D20
KIT ENCLOSURE THERMO WITH VENTS 120 CSF WITH KNOBS D20

Drawing nr.: **3_030_00040**

Rev.: 01 A2

PCB

COMPONENTS SIDE

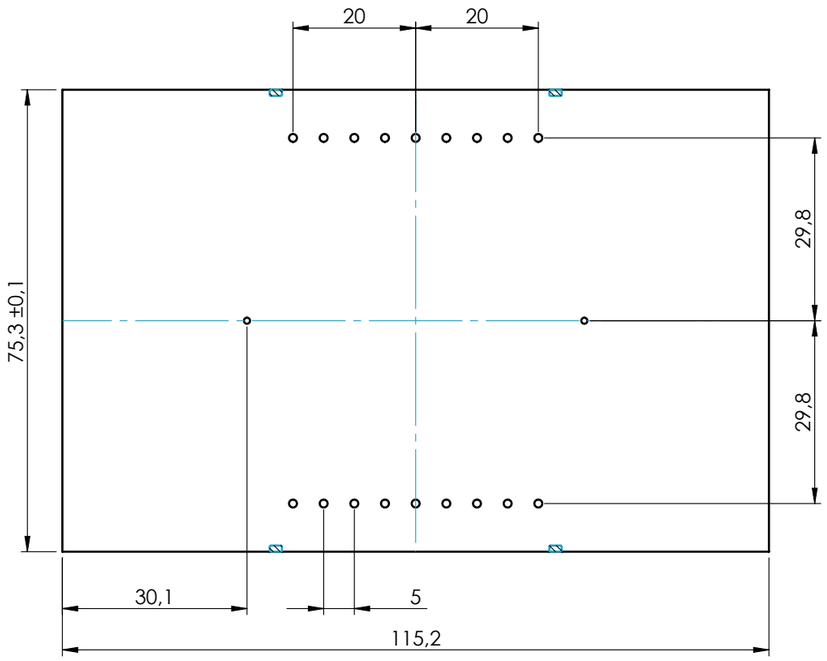

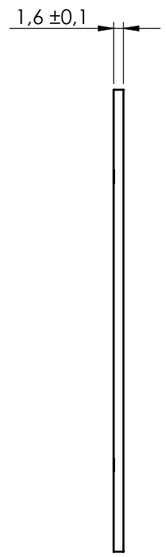

WELDING SIDE

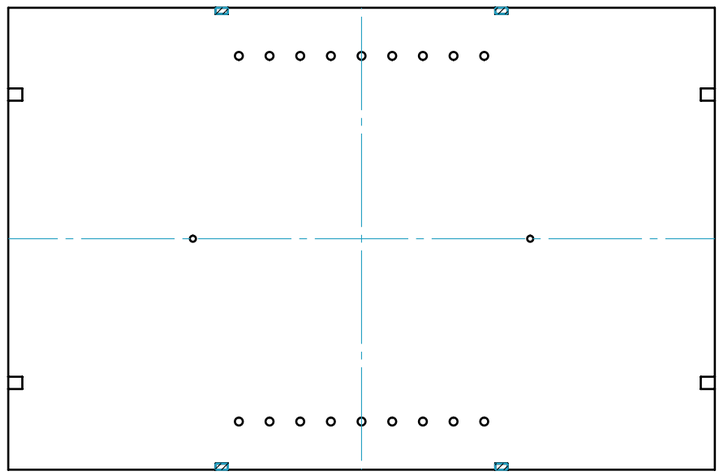

TEMPLATE FOR WALL MOUNTING

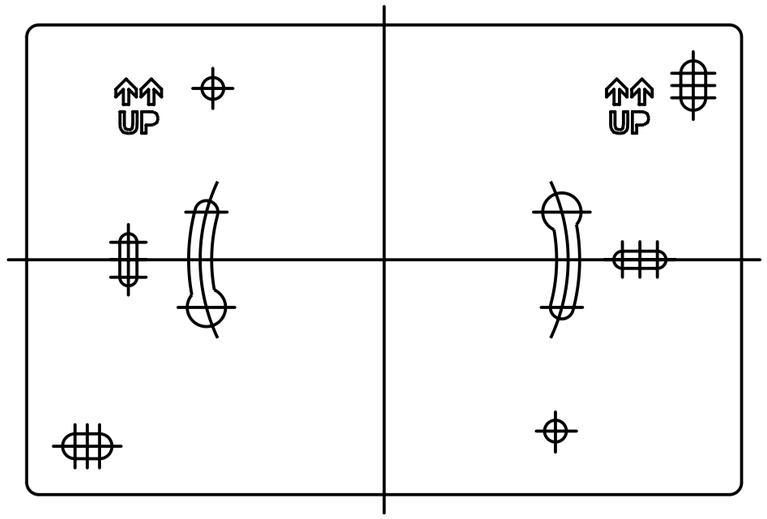

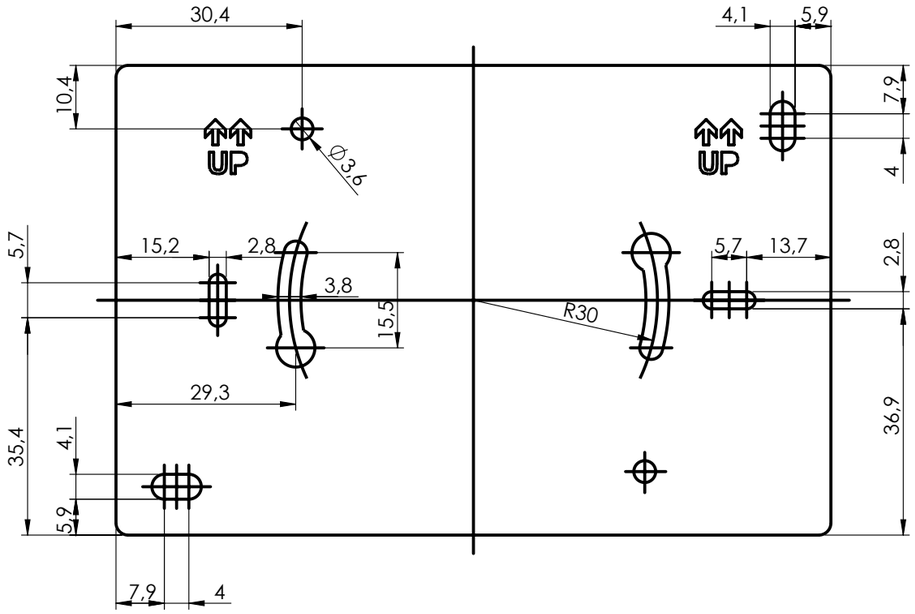

NO COMPONENTS AREA

General Tolerance UNI EN 22768/1 Media (m)					Sheet:
from 0.5 to 3	from 3 to 6	from 6 to 30	from 30 to 120	from 120 to 400	PCB
± 0.1	± 0.1	± 0.2	± 0.3	± 0.5	

Scale:	IM:	Drawed:	Checked:	Date:	Material:	Process:
1:1	--	D.S.	R.N.	29/04/2025		

Dimension in mm	The present drawing cannot be reproduced or comunicated to 3d parties, even partially, without the authorization of ITALTRONIC Srl. Italtronic reserves to protect its own rights according to the law.	Replaces the:	Derived from:	Weight:	Cod. Mold:
		T-06565-00	--	gr	--

italtronic
enclosures for electronics
italtronic.com

Description:
KIT CONTENITORE THERMO VENTILATO 120 CSF CON MANOPOLE D20
KIT ENCLOSURE THERMO WITH VENTS 120 CSF WITH KNOBS D20

Drawing nr.: **3_030_00040**

Rev.: 01

A3