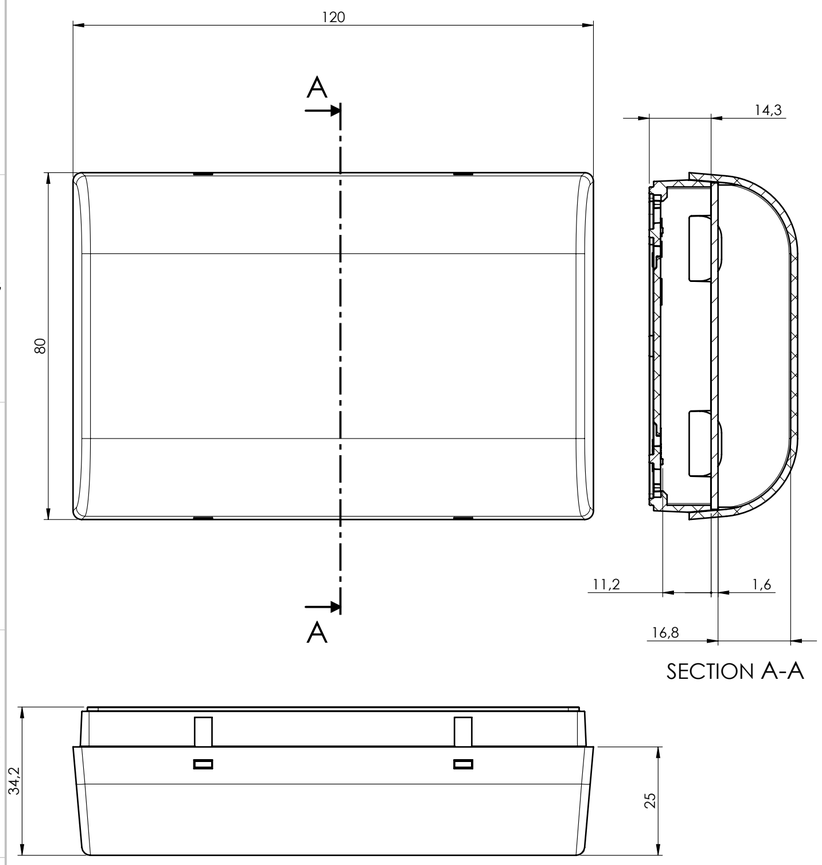

BODY

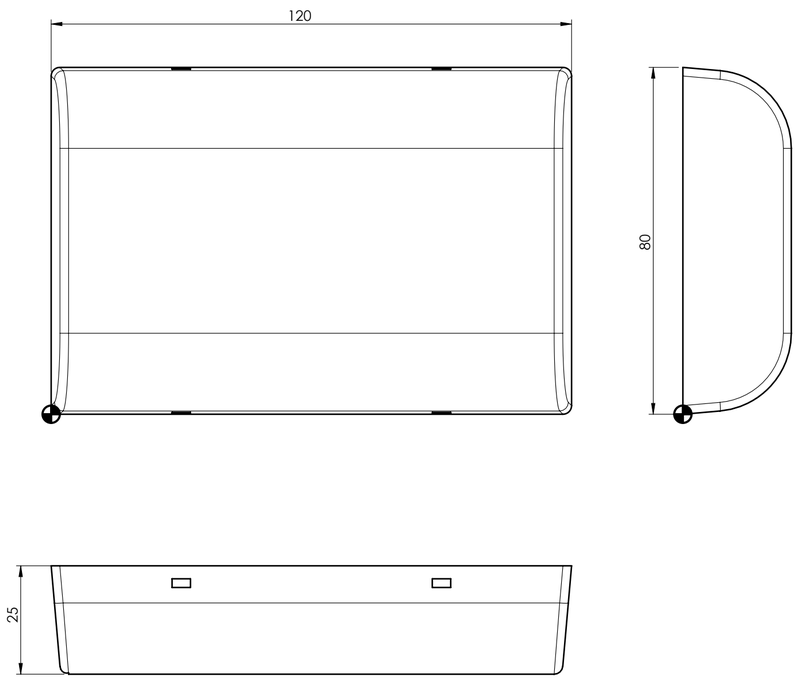

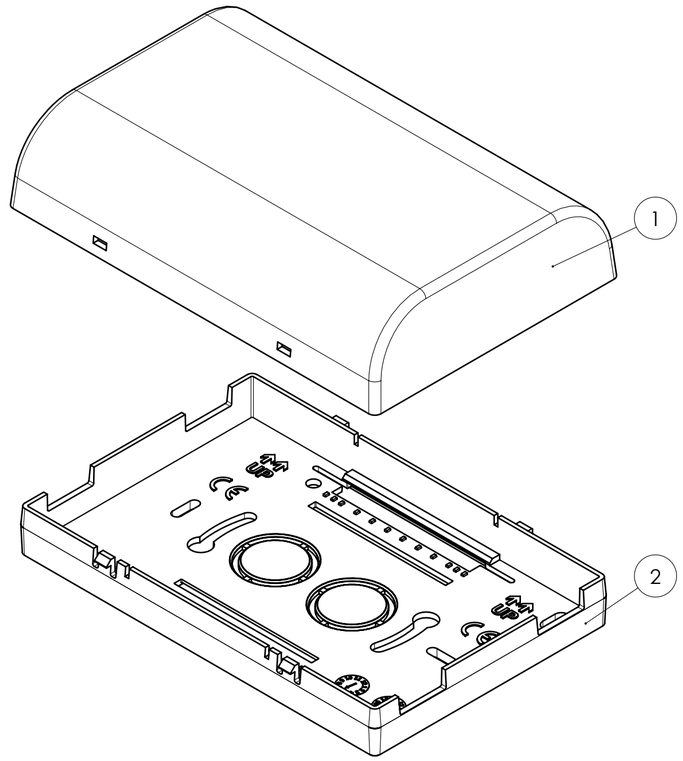

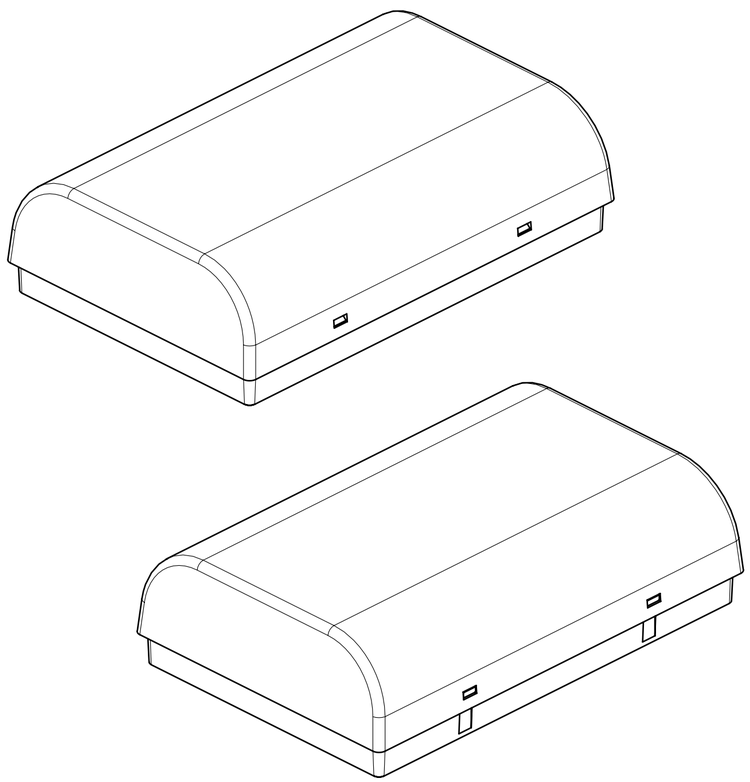

BASE

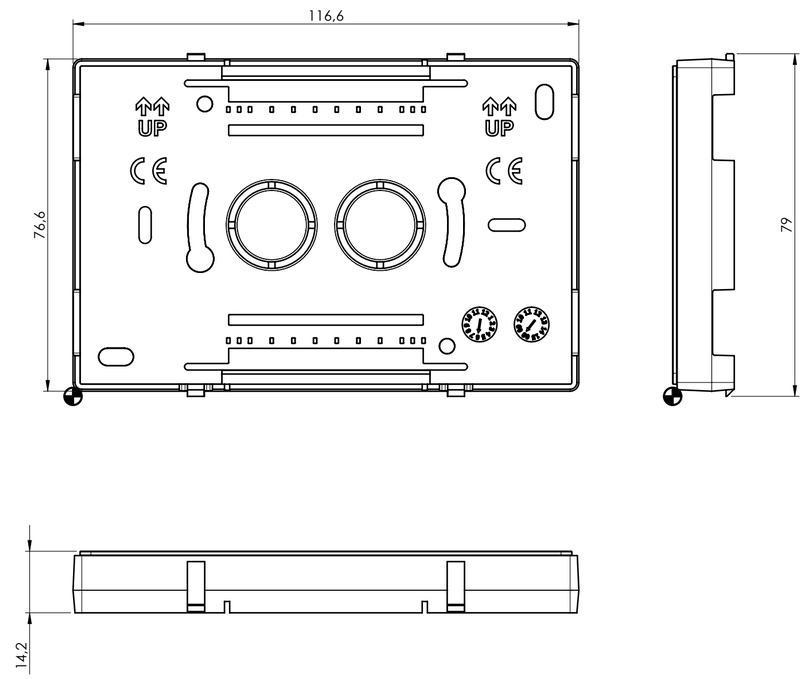

General information:
- Workpiece zero point for mechanical processing
- Minimum recommended radius for machining = R1.0 mm
- Mounting rail like EN 60715: TH 35-7.5 or TH 35-15
- Recommended PCB outline on www.italtronic.com

RIF.	Q.TY	DRAWING	DESCRIPTION
1	1	2_030_00026	COVER THERMO 120 CLOSED
2	1	2_030_00023	BASE 120 CSF18

General Tolerance UNI EN 22768/1 Media (m)						Sheet:
from 0.5 to 3 ± 0.1		from 3 to 6 ± 0.1	from 6 to 30 ± 0.2	from 30 to 120 ± 0.3	from 120 to 400 ± 0.5	1
Scale: 1:1	IM: --	Drawed: M.S.	Checked: R.N.	Date: 23/04/2024	Material:	Process:
Dimension in mm		The present drawing cannot be reproduced or comunicated to 3d parties, even partially, without the authorization of ITALTRONIC Srl. Italtronic reserves to protect its own rights according to the law.	Replaces the: T-06565-00	Derived from: --	Weight: gr	Cod. Mold: --

italtronic
enclosures for electronics
italtronic.com

Description:
KIT CONTENITORE THERMO CHIUSO 120 CSF
KIT ENCLOSURE THERMO CLOSED 120 CSF

Drawing nr.: **3_030_00006**

Rev.: 01

A2

PCB

COMPONENTS SIDE

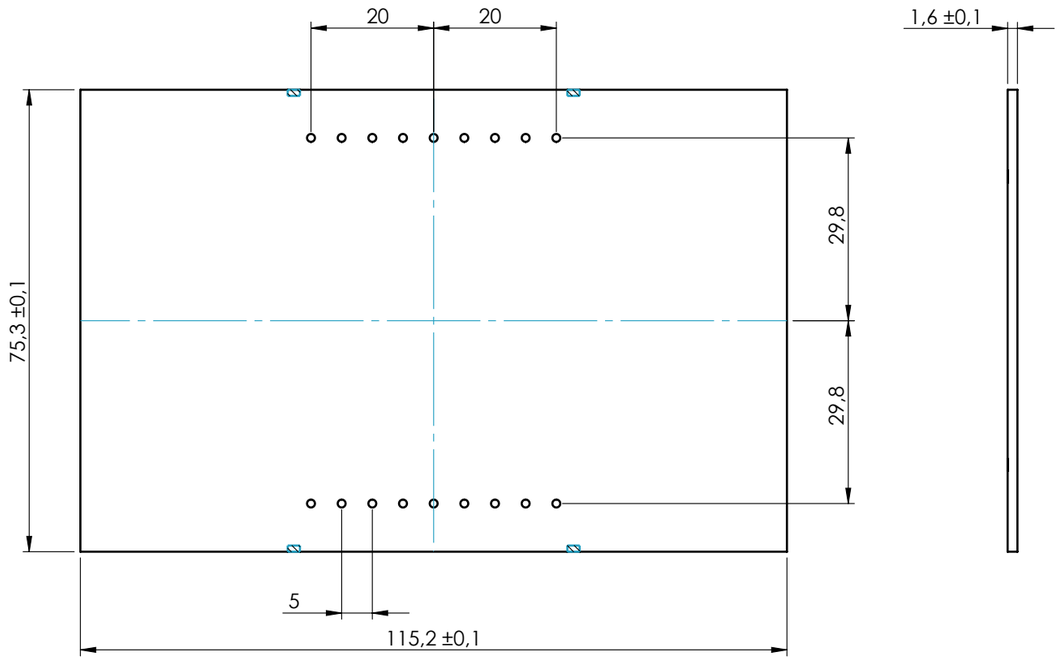

WELDING SIDE

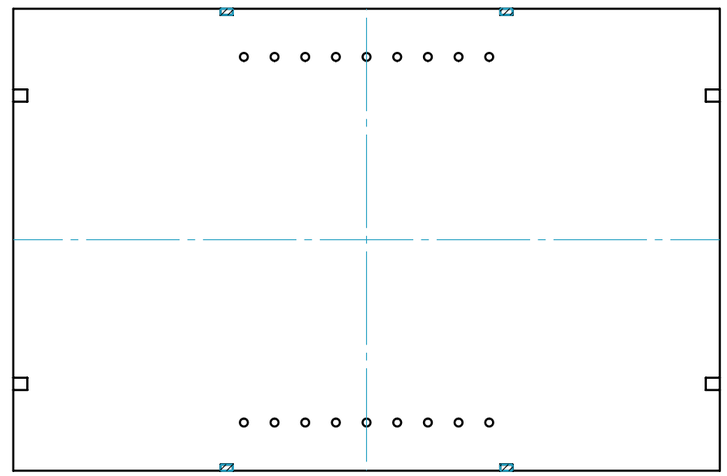

TEMPLATE FOR WALL MOUNTING

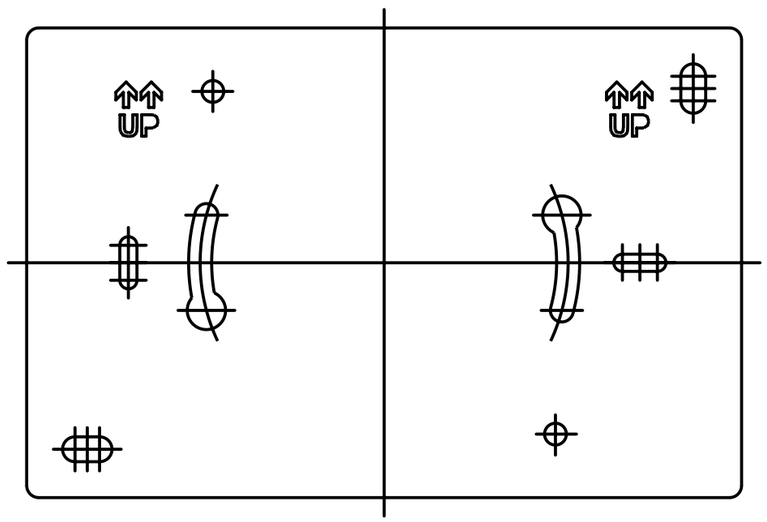

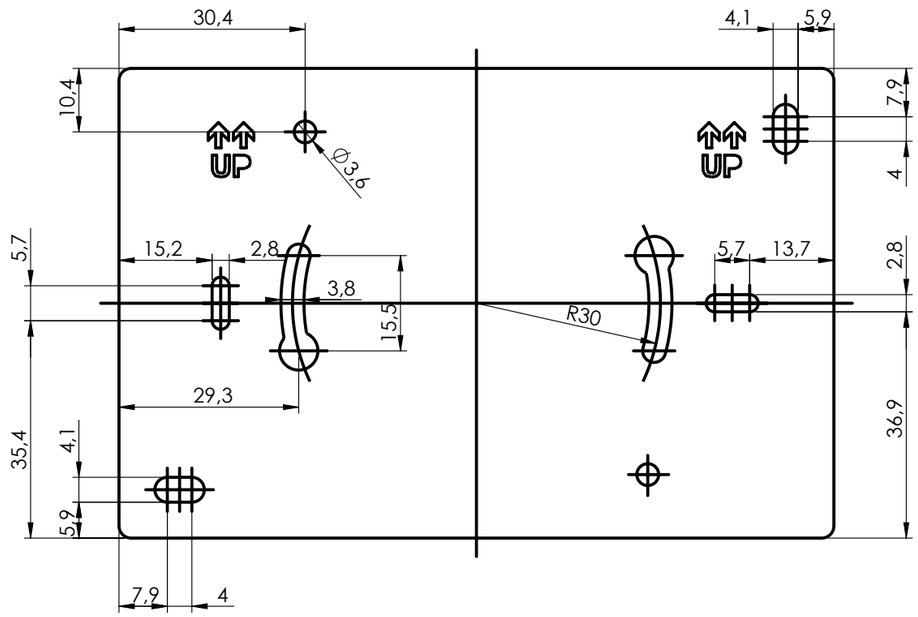

NO COMPONENTS AREA

General Tolerance UNI EN 22768/1 Media (m)					Sheet:
from 0.5 to 3	from 3 to 6	from 6 to 30	from 30 to 120	from 120 to 400	PCB
± 0.1	± 0.1	± 0.2	± 0.3	± 0.5	
Scale: 1:1	IM: --	Drawed: M.S.	Checked: R.N.	Date: 23/04/2024	Material: / Process:
Dimension in mm	The present drawing cannot be reproduced or comunicated to 3d parties, even partially, without the authorization of ITALTRONIC Srl. Italtronic reserves to protect its own rights according to the law.	Replaces the: T-06565-00	Derived from: --	Weight: gr	Cod. Mold: --

italtronic
enclosures for electronics
italtronic.com

Description:
KIT CONTENITORE THERMO CHIUSO 120 CSF
KIT ENCLOSURE THERMO CLOSED 120 CSF

Drawing nr.: **3_030_00006**

Rev.: 01

A3