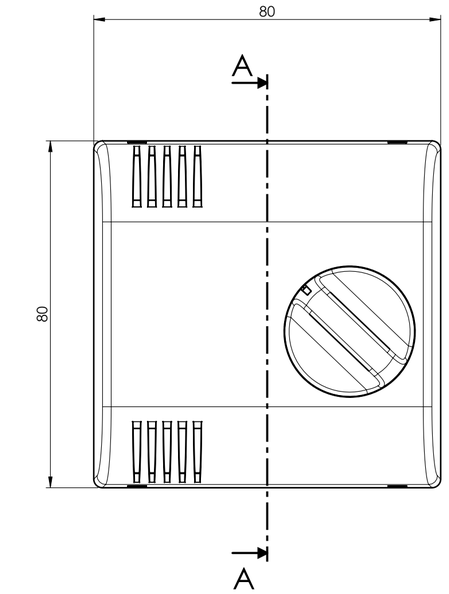

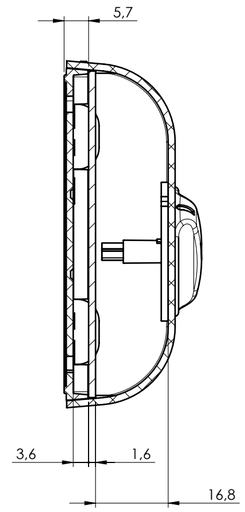

SECTION A-A

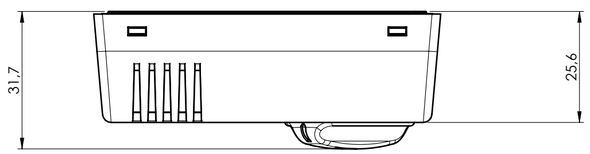

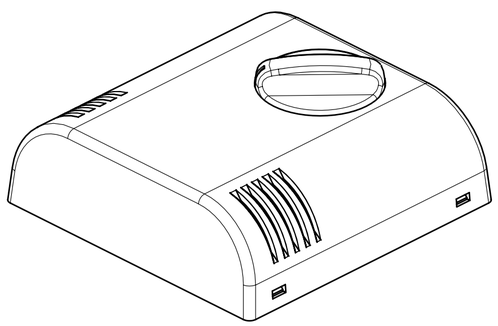

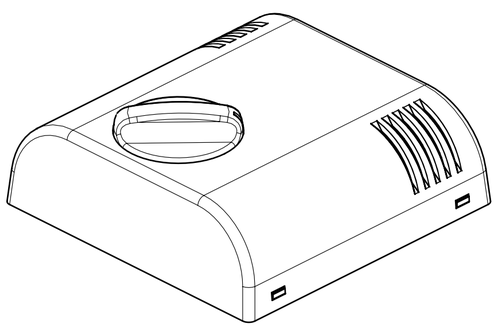

BODY ENCLOSURE

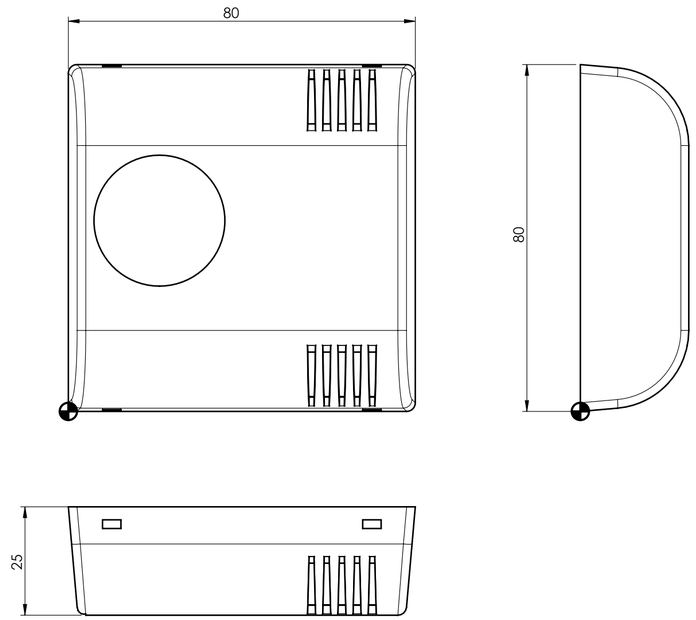

BASE

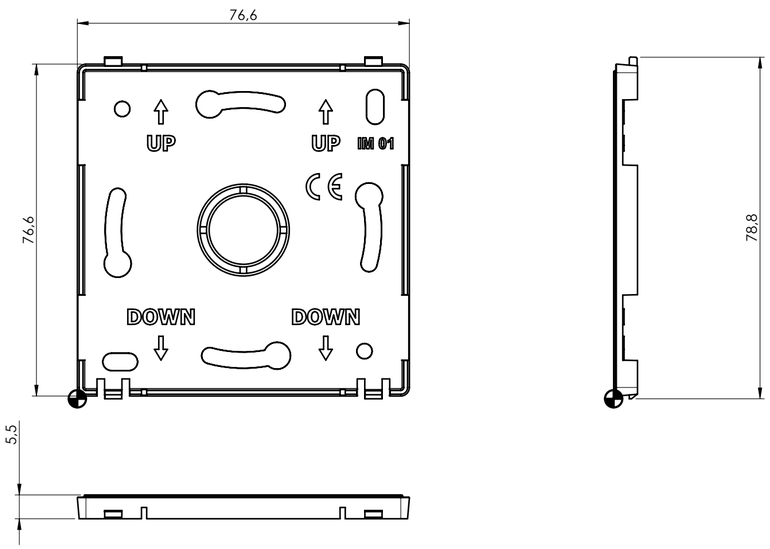

KNOB

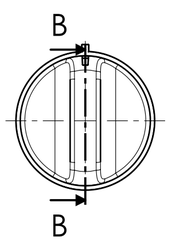

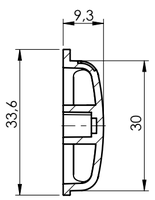

SECTION B-B

PIN

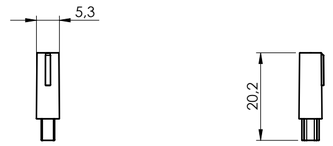

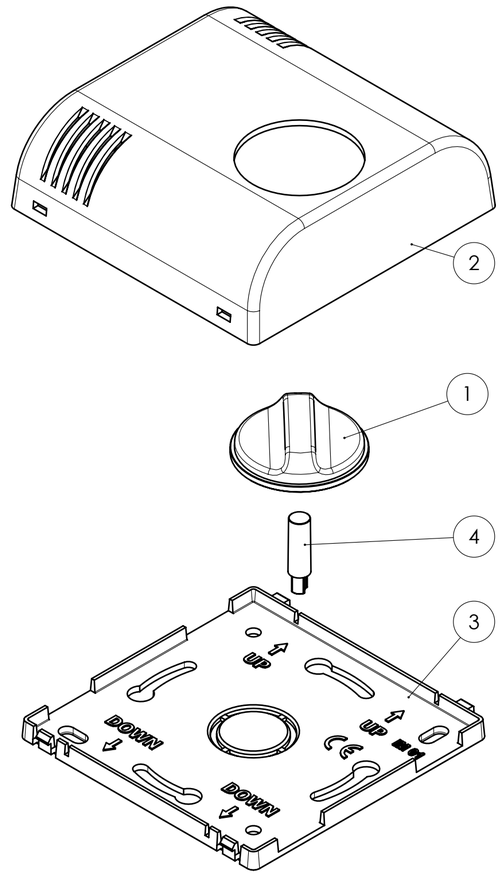

General information:
- Workpiece zero point for mechanical processing
- Minimum recommended radius for machining = R1.0 mm
- Mounting rail like EN 60715: TH 35-7.5 or TH 35-15
- Recommended PCB outline on www.italtronic.com

RIF.	Q.TY	DRAWING	DESCRIPTION
1	1	2_010_00063	ITOUCH D30 HIGH PROFILE KNOB WITH EMBOSSED LEVER
2	1	2_030_00028	COVER THERMO WITH VENTS 80 WITH KNOB D30
3	1	2_030_00015	BASE THERMO 80
4	1	2_030_00008	PIN THERMO 20.2 mm

General Tolerance UNI EN 22768/1 Media (m)						Sheet:
from 0.5 to 3 ± 0.1		from 3 to 6 ± 0.1	from 6 to 30 ± 0.2	from 30 to 120 ± 0.3	from 120 to 400 ± 0.5	1
Scale: 1:1	IM: --	Drawed: D.S.	Checked: R.N.	Date: 24/04/2025	Material:	Process:
Dimension in mm		The present drawing cannot be reproduced or comunicated to 3d parties, even partially, without the authorization of ITALTRONIC Srl. Italtronic reserves its protect its own rights according to the law.	Replaces the: --	Derived from:	Weight: gr	Cod. Mold: --

italtronic
enclosures for electronics
italtronic.com

Description:
KIT CONTENITORE THERMO VENTILATO 80 CON MANOPOLA D30
KIT ENCLOSURE THERMO WITH VENTS 80 WITH KNOB D30

Drawing nr.: **3_030_00017**
Rev.: 01
A2

PCB

COMPONENTS SIDE

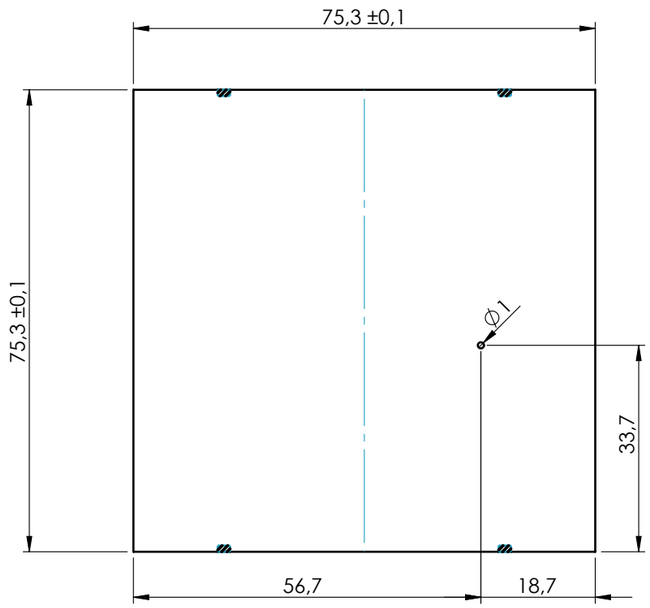

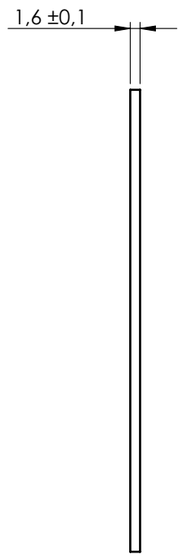

WELDING SIDE

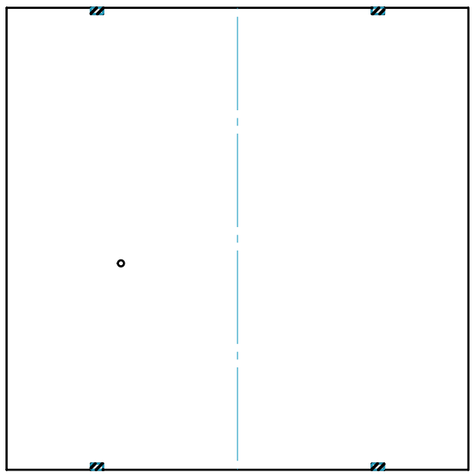

TEMPLATE FOR WALL MOUNTING

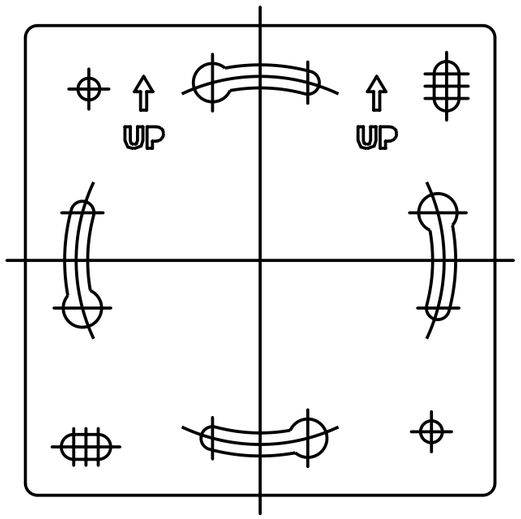

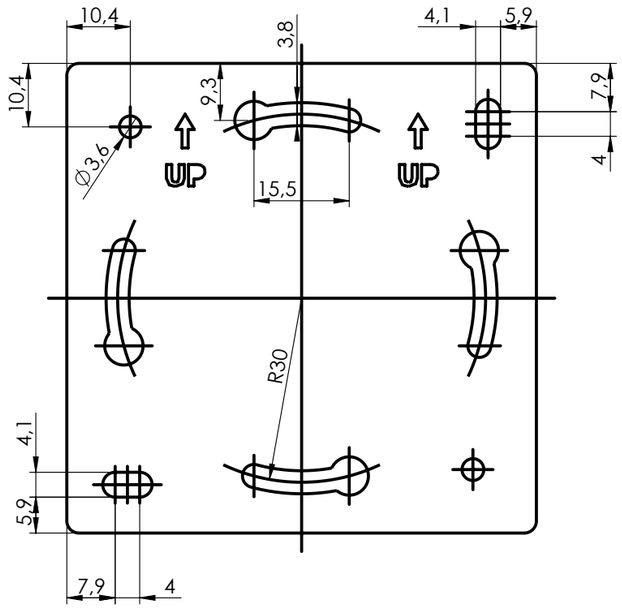

NO COMPONENTS AREA

General Tolerance UNI EN 22768/1 Media (m)					Sheet:
from 0.5 to 3	from 3 to 6	from 6 to 30	from 30 to 120	from 120 to 400	PCB
± 0.1	± 0.1	± 0.2	± 0.3	± 0.5	

Scale:	IM:	Drawed:	Checked:	Date:	Material:	Process:
1:1	--	D.S.	R.N.	24/04/2025		
Dimension in mm		The present drawing cannot be reproduced or comunicated to 3d parties, even partially, without the authorization of ITALTRONIC Srl. Italtronic reserves to protect its own rights according to the law.	Replaces the: --	Derived from:	Weight: gr	Cod. Mold: --

italtronic
enclosures for electronics
italtronic.com

Description:
KIT CONTENITORE THERMO VENTILATO 80 CON MANOPOLA D30
KIT ENCLOSURE THERMO WITH VENTS 80 WITH KNOB D30

Drawing nr.: **3_030_00017**

Rev.: 01

A3