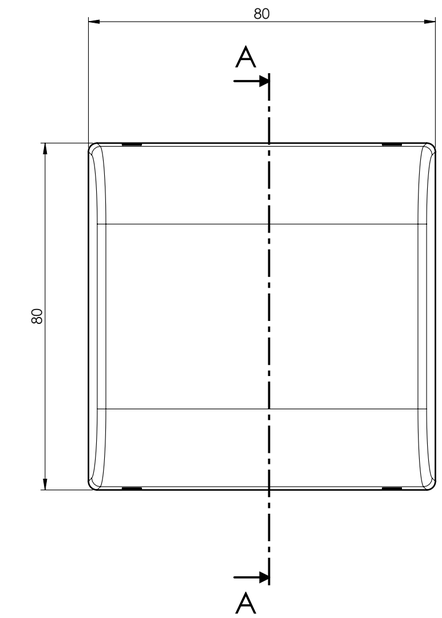


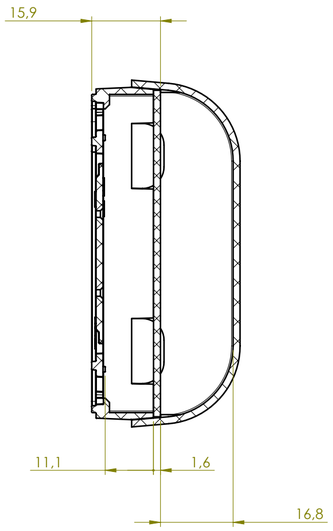


SECTION A-A

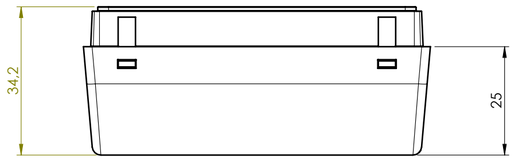


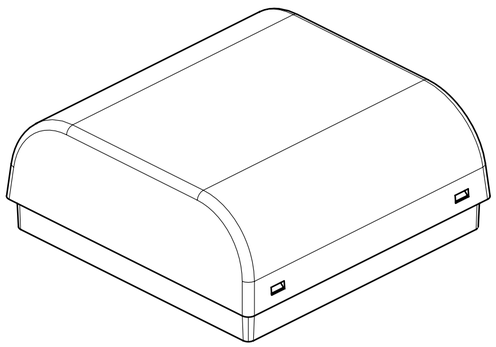

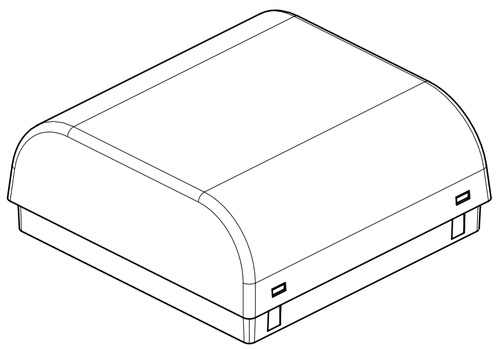

BODY

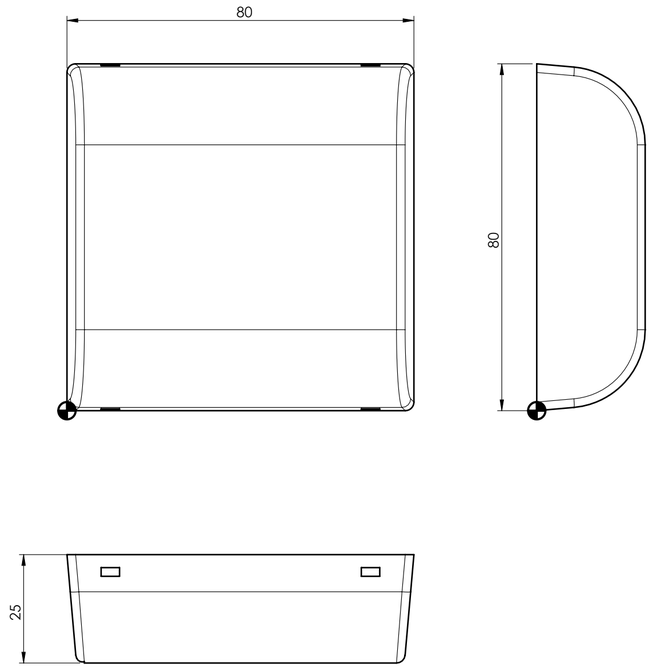


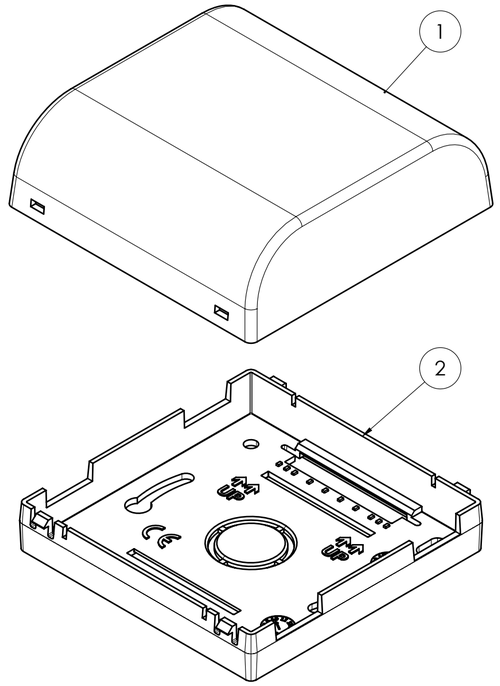


BASE

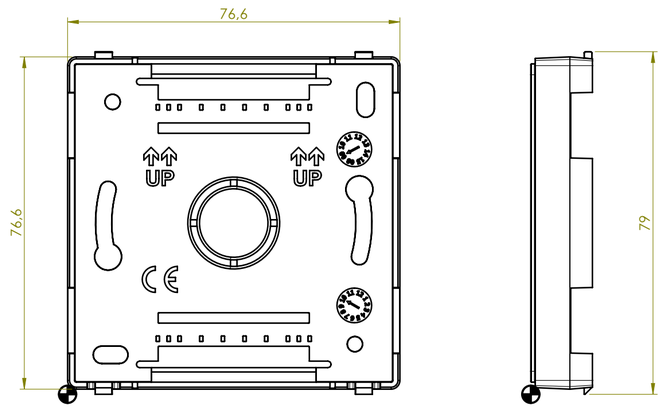


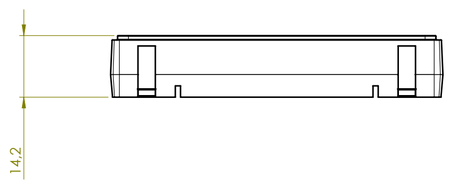


General information:
- Workpiece zero point for mechanical processing
- Minimum recommended radius for machining = R1.0 mm
- Mounting rail like EN 60715: TH 35-7.5 or TH 35-15
- Recommended PCB outline on www.italtronic.com

| RIF. | Q.TY | DRAWING | DESCRIPTION |
|---|---|---|---|
| 1 | 1 | 2_030_00017 | COVER THERMO 80 CLOSED |
| 2 | 1 | 2_030_00027 | BASE THERMO 80 CSF |

| General Tolerance UNI EN 22768/1 Media (m) | | | | | | Sheet: |
|---|---|---|---|---|---|---|
| from 0.5 to 3 ± 0.1 | | from 3 to 6 ± 0.1 | from 6 to 30 ± 0.2 | from 30 to 120 ± 0.3 | from 120 to 400 ± 0.5 | 1 |
| Scale: 1:1 | IM: -- | Drawed: D.S. | Checked: R.N. | Date: 24/04/2025 | Material: | Process: |
| Dimension in mm | | The present drawing cannot be reproduced or communicated to 3d parties, even partially, without the authorization of ITALTRONIC SR. Italtronic reserves to protect its own rights according to the law. | Replaces the: -- | Derived from: -- | Weight: gr | Cod. Mold: -- |

italtronic
enclosures for electronics
italtronic.com

Description:
KIT CONTENITORE THERMO CHIUSO 80 CSF
KIT ENCLOSURE THERMO CLOSED 80 CSF

Drawing nr.: **3_030_00016**

Rev.: 01

A2

# PCB

## COMPONENTS SIDE

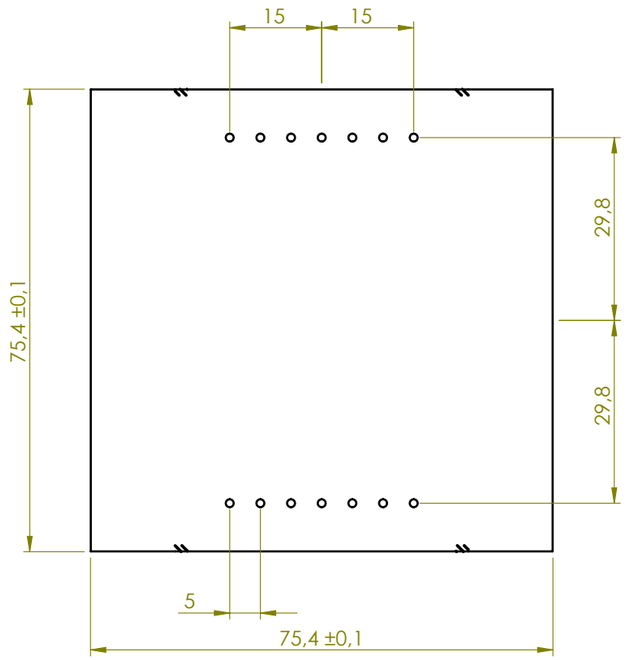


## WELDING SIDE

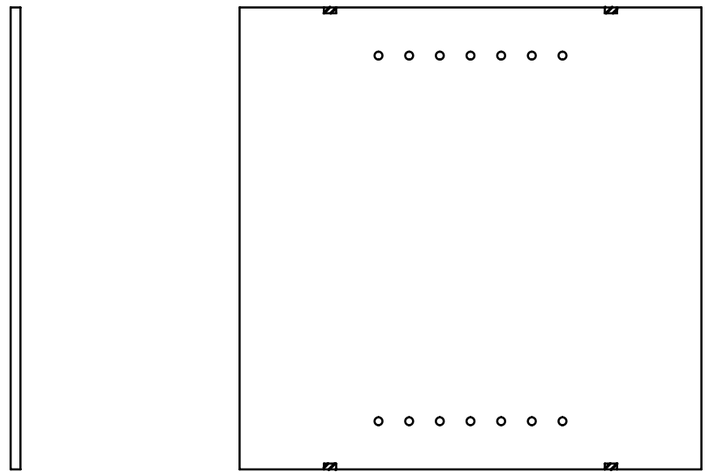

## TEMPLATE FOR WALL MOUNTING

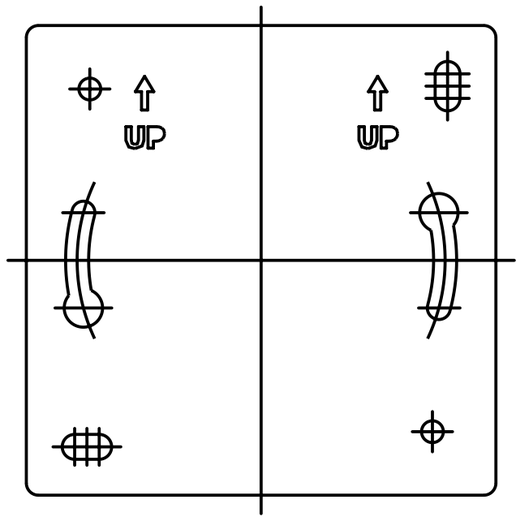


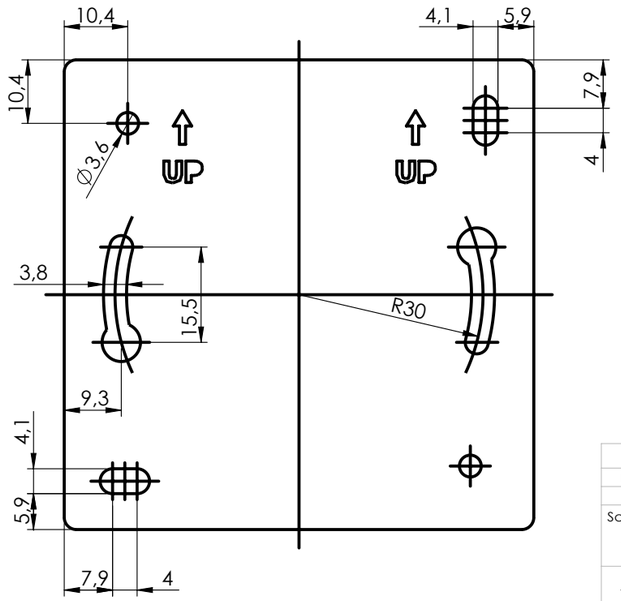


NO COMPONENTS AREA

| General Tolerance UNI EN 22768/1 Media (m) | | | | | Sheet: |
|---|---|---|---|---|---|
| from 0.5 to 3 | from 3 to 6 | from 6 to 30 | from 30 to 120 | from 120 to 400 | PCB |
| ± 0.1 | ± 0.1 | ± 0.2 | ± 0.3 | ± 0.5 | |
| Scale: 1:1 | IM: -- | Drawed: D.S. | Checked: R.N. | Date: 24/04/2025 | Material: / Process: |
| Dimension in mm | The present drawing cannot be reproduced or comunicated to 3d parties, even partially, without the authorization of ITALTRONIC Srl. Italtronic reserves to protect its own rights according to the law. | | Replaces the: -- | Derived from: -- | Weight: gr / Cod. Mold: -- |

italtronic
enclosures for electronics
italtronic.com

Description:
KIT CONTENITORE THERMO CHIUSO 80 CSF
KIT ENCLOSURE THERMO CLOSED 80 CSF

Drawing nr.: **3_030_00016**

Rev.: 01

A3