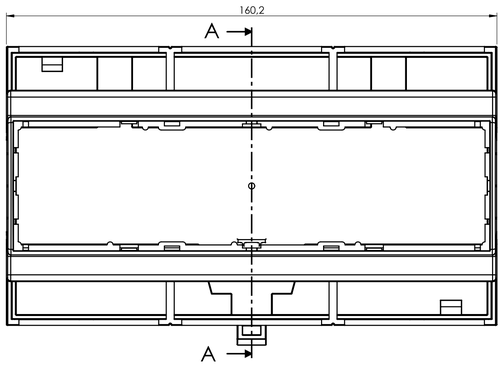


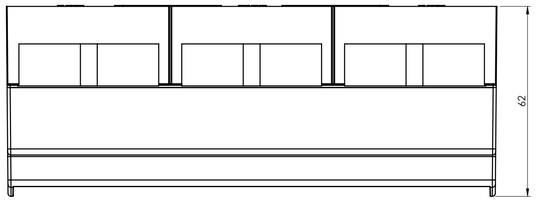


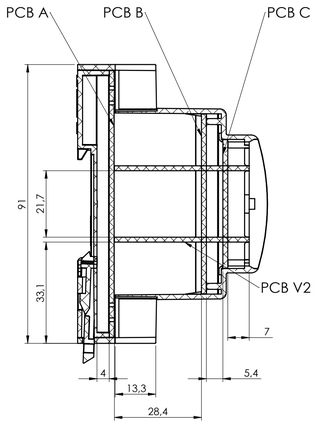


SECTION A-A

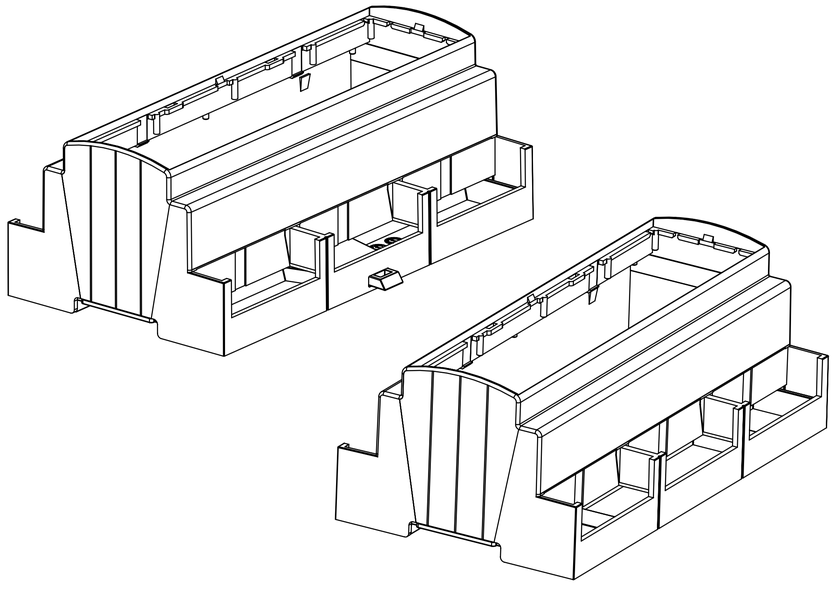

## BODY ENCLOSURE

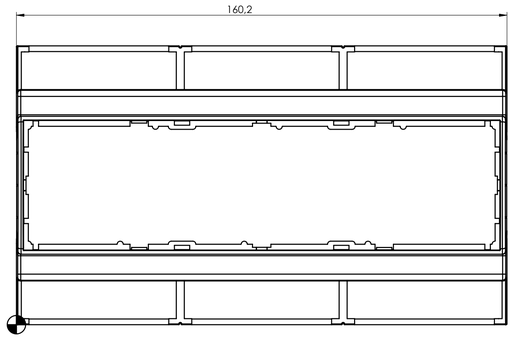


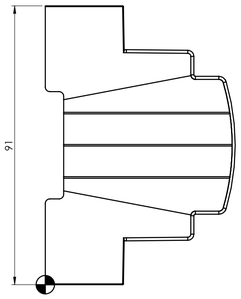


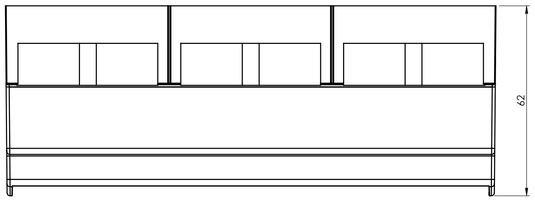


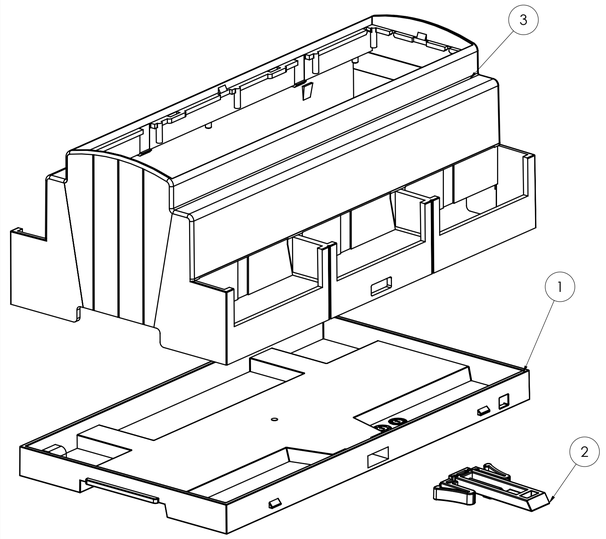


## BASE

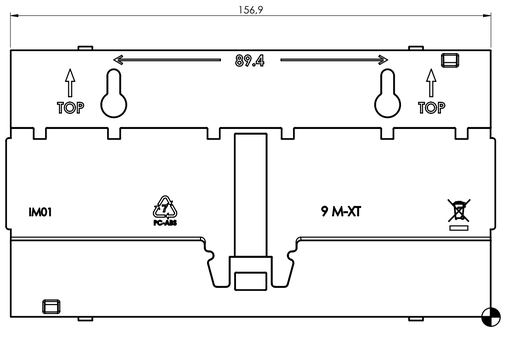


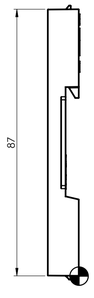


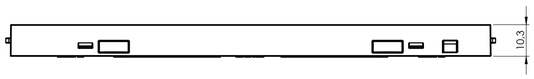


## HOOK

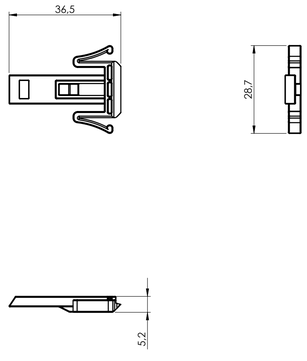


General information:
- Workpiece zero point for mechanical processing
- Minimum recommended radius for machining = R1.0 mm
- Mounting rail like EN 60715: TH 35-7.5 or TH 35-15
- Recommended PCB outline on www.italtronic.com

| RIF. | Q.TY | DRAWING | DESCRIPTION |
|---|---|---|---|
| 1 | 1 | 2_250_00086 | BASE 9M MODULBOX XT-XTS |
| 2 | 1 | 2_250_00072 | HOOK FOR MODULBOX XT-XTS |
| 3 | 1 | 2_250_03680 | BODY MODULBOX XTS 9M53-A |

General Tolerance UNI EN 22768/1 Media (m)

| from 0.5 to 3 | from 3 to 6 | from 6 to 30 | from 30 to 120 | from 120 to 400 | Sheet: |
|---|---|---|---|---|---|
| ± 0.1 | ± 0.1 | ± 0.2 | ± 0.3 | ± 0.5 | 1 |

| Scale: | Drawed: | Checked: | Date: | Material: | Process: |
|---|---|---|---|---|---|
| 1:1 | | R.N. | 04/05/2023 | | |

Dimension in mm

The present drawing cannot be reproduced or communicated to be copied, or used for the purpose of authorization of ITALTRONIC Sa. Italtronic reserves to protect the own rights according to the law.

Derived from:

Weight: gr

Cod. Mold: --

italtronic
enclosures for electronics
italtronic.com

Description:
KIT CONTENITORE MODULBOX XTS 9M53-A
KIT ENCLOSURE MODULBOX XTS 9M53-A

Drawing nr.: **3_250_00105**

Rev.: 00 A1

## PCB A

Max height of the terminal:
Modulbox XT/XTS: 18.5 mm
Modulbox ONE: 20 mm

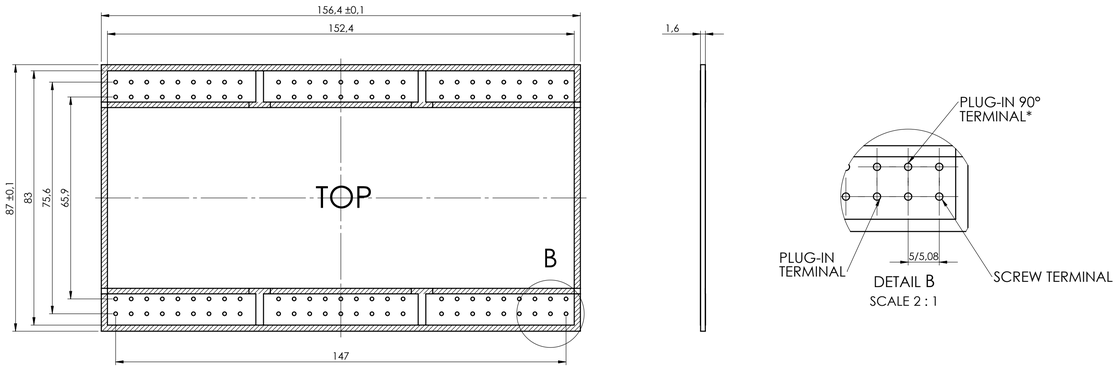


*To use the PLUG-IN terminals in Modulbox ONE use plug-in adapter P05000003E (5/5.08 pitch) and P05000004E (7.5/7.62 pitch)*

## PCB B

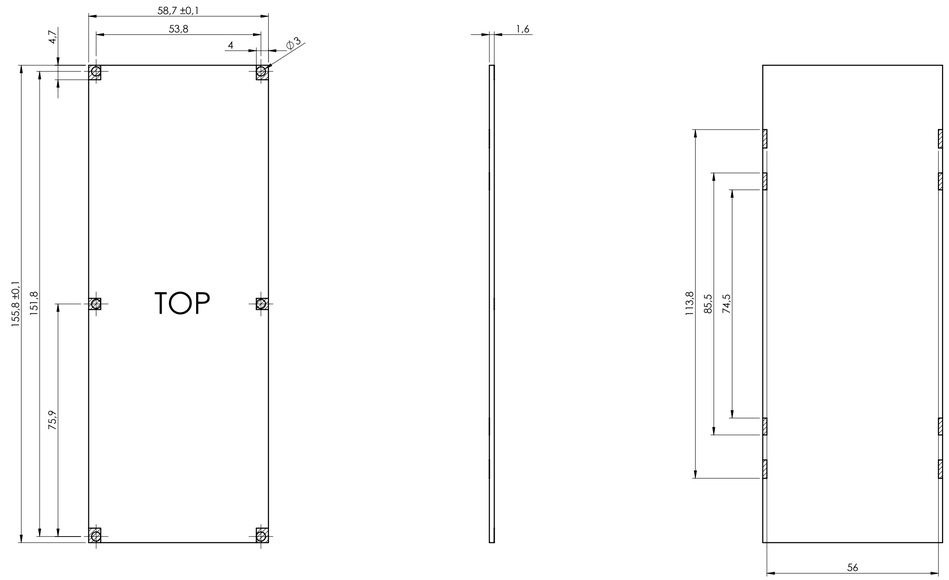


## PCB C

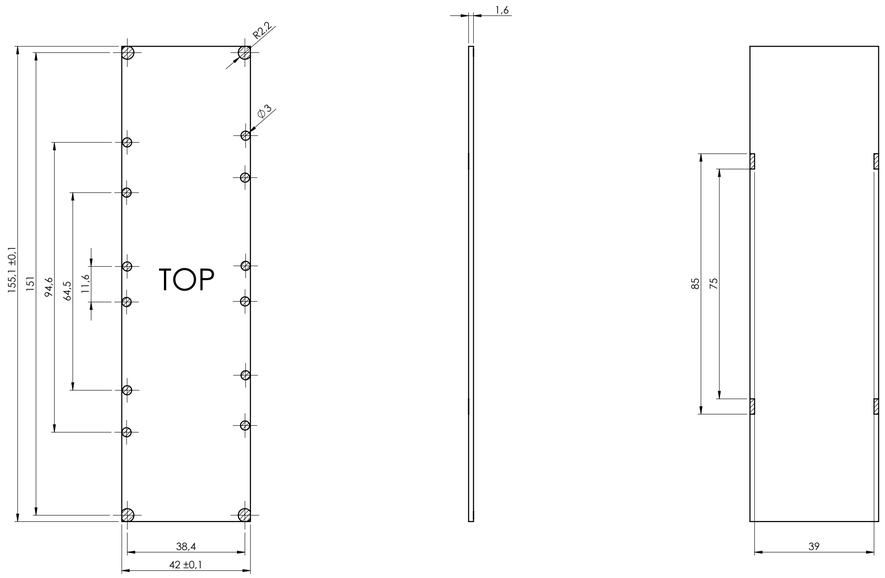


## PCB V2

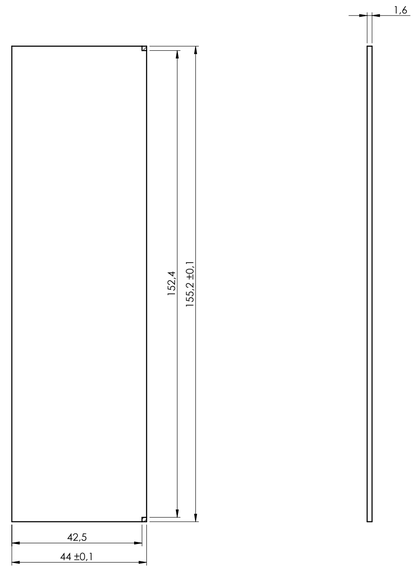


NO COMPONENTS AREA

| General Tolerance UNI EN 22768/1 Media (m) | | | | | Sheet: |
|---|---|---|---|---|---|
| from 0,5 to 3 | from 3 to 6 | from 6 to 30 | from 30 to 120 | from 120 to 400 | PCB |
| ± 0,1 | ± 0,1 | ± 0,2 | ± 0,3 | ± 0,5 | |
| Scale: 1:1 | Drawed: | Checked: R.N. | Date: 04/05/2023 | Material: | Process: |
| Dimension in mm | The present drawing cannot be reproduced or communicated to 3rd parties without our written consent. Its authorization of ITALTRONIC INDUSTRIE reserves to protect its own rights according to the law. | Derived from: | | Weight: gr | Cod. Mold: -- |

italtronic enclosures for electronics
italtronic.com

Description:
KIT CONTENITORE MODULBOX XTS 9M53-A
KIT ENCLOSURE MODULBOX XTS 9M53-A

Drawing nr.: **3_250_00105**

Rev.: 00 A1