GENERAL ASSEMBLY

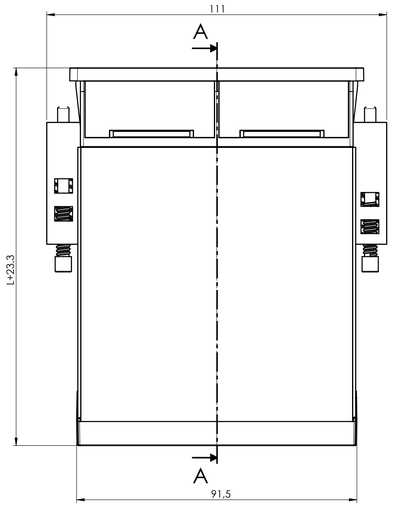

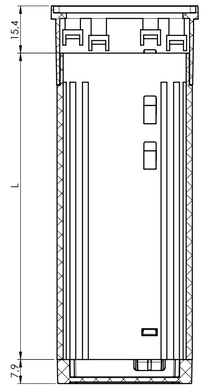

SECTION A-A

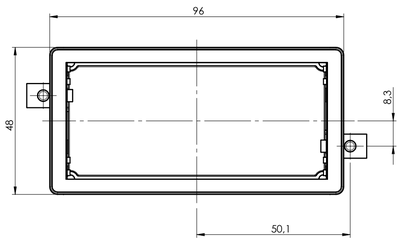

BODY ENCLOSURE

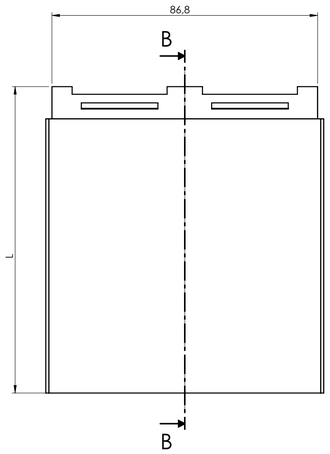

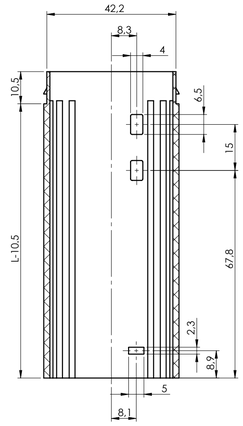

SECTION B-B

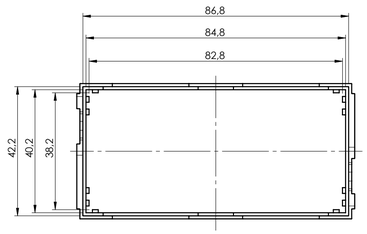

Different Lenght (L) enclosure version:	
48x96 XTS	L= 57 mm
48x96 XTS	L= 75 mm
48x96 XTS	L= 100 mm
48x96 XTS	L= 124 mm
48x96 XTS	L= XXX mm

REAR COVER

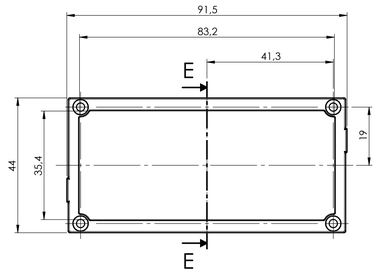

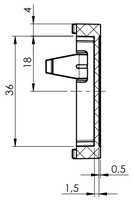

SECTION E-E

HOOK
SCALE 2:1

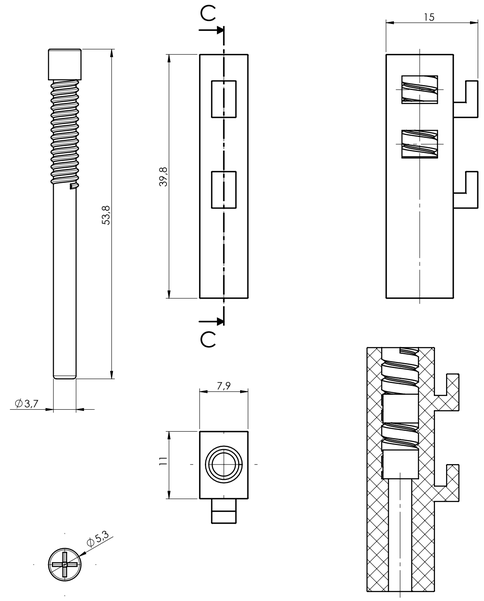

SECTION C-C
SCALE 2 : 1

GENERAL ASSEMBLY
EXPLODED VIEW

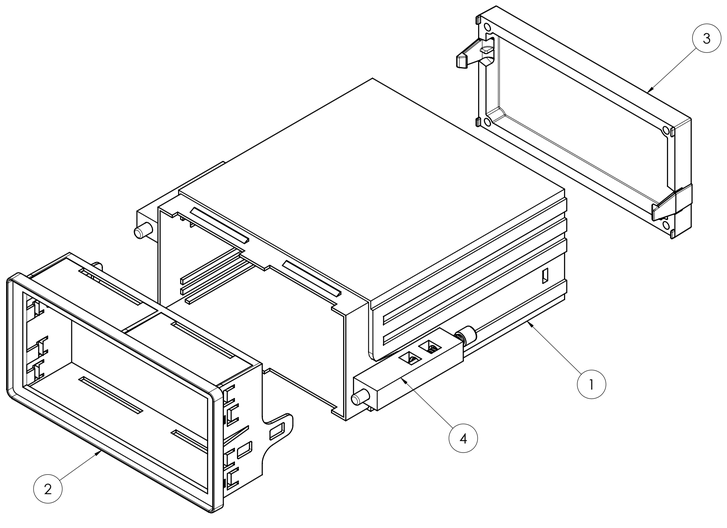

FRONT COVER

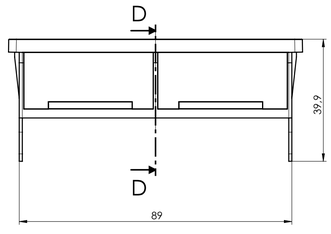

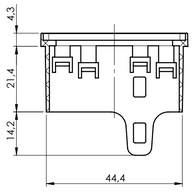

SECTION D-D

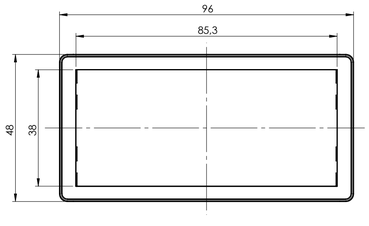

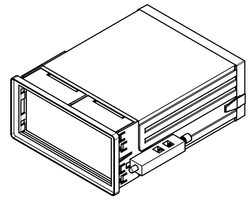

RIF.	Q.TY	DRAWING	DESCRIPTION
1	1	2_190_00070	BODY INCABOX XT-XTS IT 48X96
2	1	2_190_00075	FORNT FRAME INCABOX XTS 48X96
3	1	2_190_00074	REAR FRAME INCABOX XTS 48X96
4	2	3_190_00037	INCABOX PLASTIC HOOKS

General Tolerance UNI EN 22768/1 Media (m)					Sheet:
from 0,5 to 3	from 3 to 6	from 6 to 30	from 30 to 120	from 120 to 400	1
± 0,1	± 0,1	± 0,2	± 0,3	± 0,5	

Scale:	IM:	Drawed:	Checked:	Date:	Material:	Process:
1:1	--	R.N.	R.N.	19/12/2025		

Dimension in mm	The present drawing cannot be reproduced or communicated to a third party without the prior authorization of ITALTRONIC SL. Reserved all rights according to the law on own rights according to the law.	Replaces the:	Derived from:	Weight:	Cod. Mold:
		I-06717		383.62 gr	--

italtronic
enclosures for electronics
italtronic.com

Description:
KIT CORTEINFORE INCABOX XTS IT 48X96
KIT ENCLOSURE INCABOX XTS IT 48X96

Drawing nr.:	Rev.:	
3_190_00019	-	A1

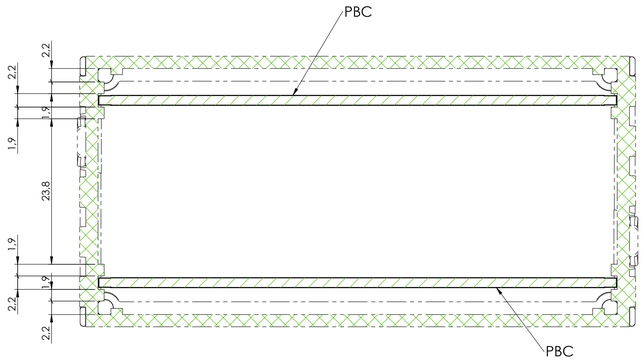

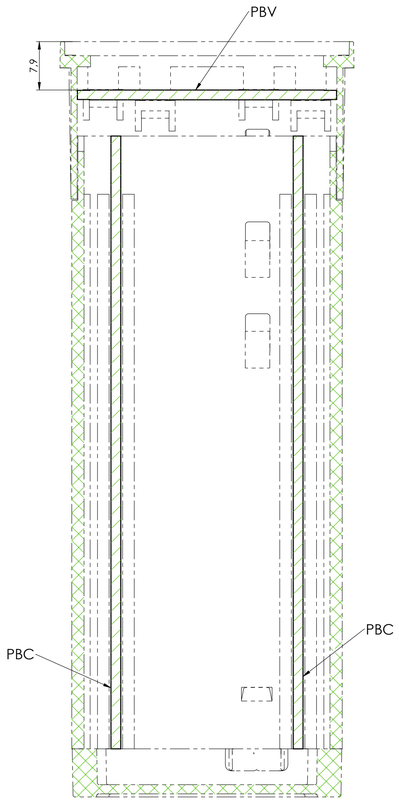

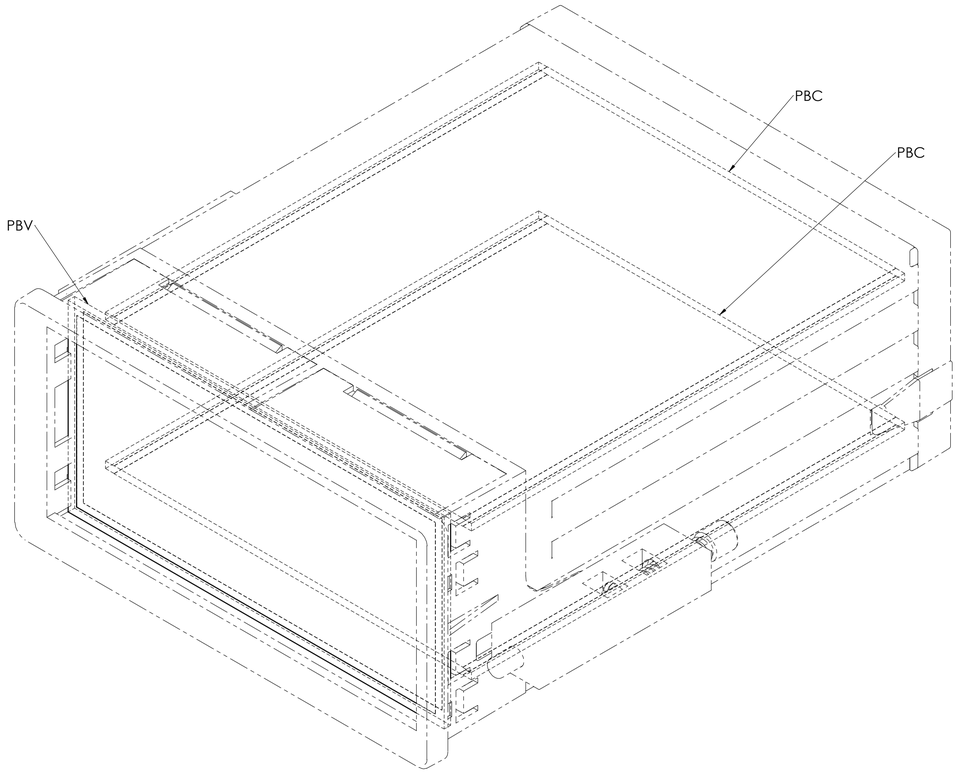

PBV

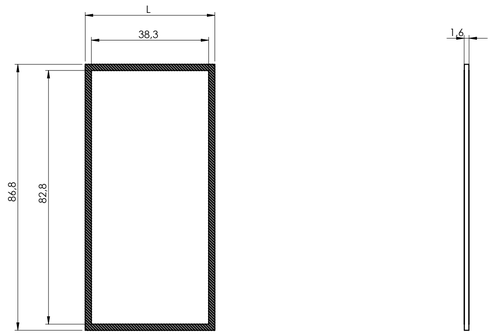

PBC

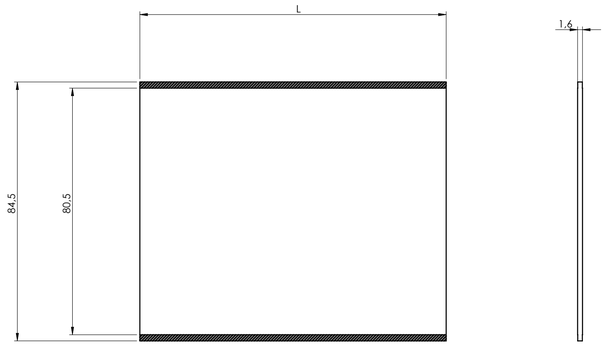

NO COMPONENTS AREA

Different Lenght (L) enclosure version:	
48x96 XTS	L= 57 mm
48x96 XTS	L= 75 mm
48x96 XTS	L= 100 mm
48x96 XTS	L= 124 mm
48x96 XTS	L= XXX mm

General Tolerance UNI EN 22768/1 Media (m)						Sheet:
from 0,5 to 3	from 3 to 6	from 6 to 30	from 30 to 120	from 120 to 400		PBC
± 0,1	± 0,1	± 0,2	± 0,3	± 0,5		
Scale:	IM:	Drawed:	Checked:	Date:	Material:	Process:
2:1	--	R.N.	R.N.	19/12/2025		
Dimension in mm	The present drawing cannot be reproduced or transmitted to third parties, even partially, without the authorization of ITALTRONIC Srl. All rights are reserved. Violation of over rights according to the law.	Replaces the:	Derived from:	Weight:		Cod. Mold:
		I-06717		383.62 gr		--

italtronic enclosures for electronics
italtronic.com

Description:
KIT CONTENITORE INCABOX XTS IT 48X96
KIT ENCLOSURE INCABOX XTS IT 48X96

Drawing nr.: **3_190_00019**

Rev.: -

A1